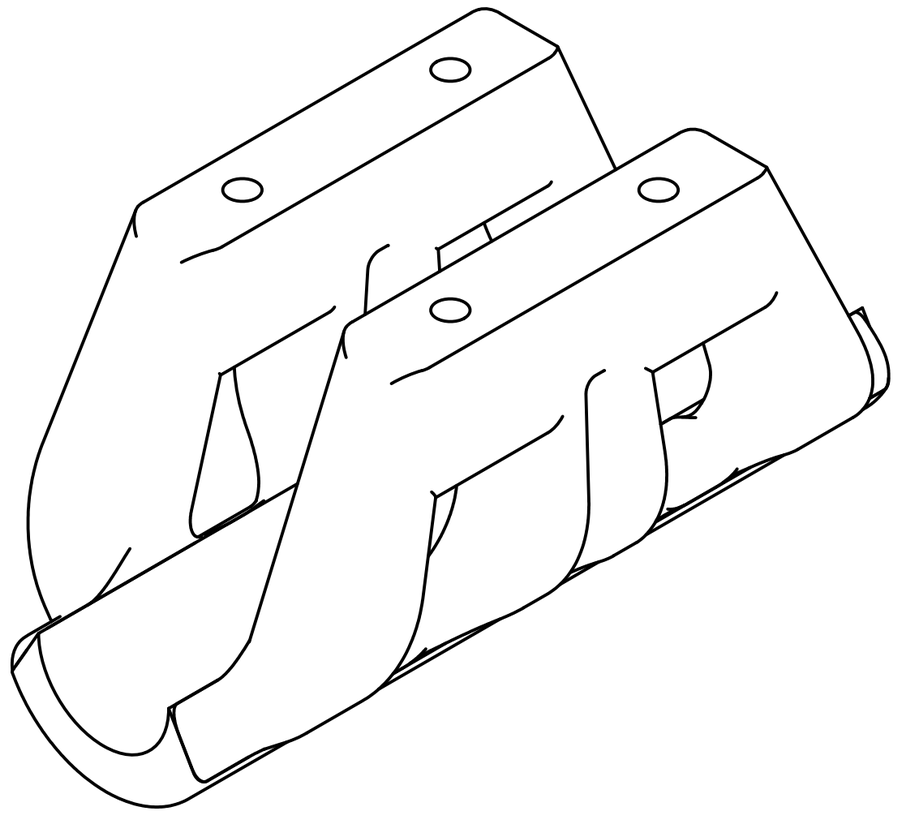

Created by	
Mark Joly	18.03.2026
Sheet	
1/4	
Title	
Back_motor_mount	

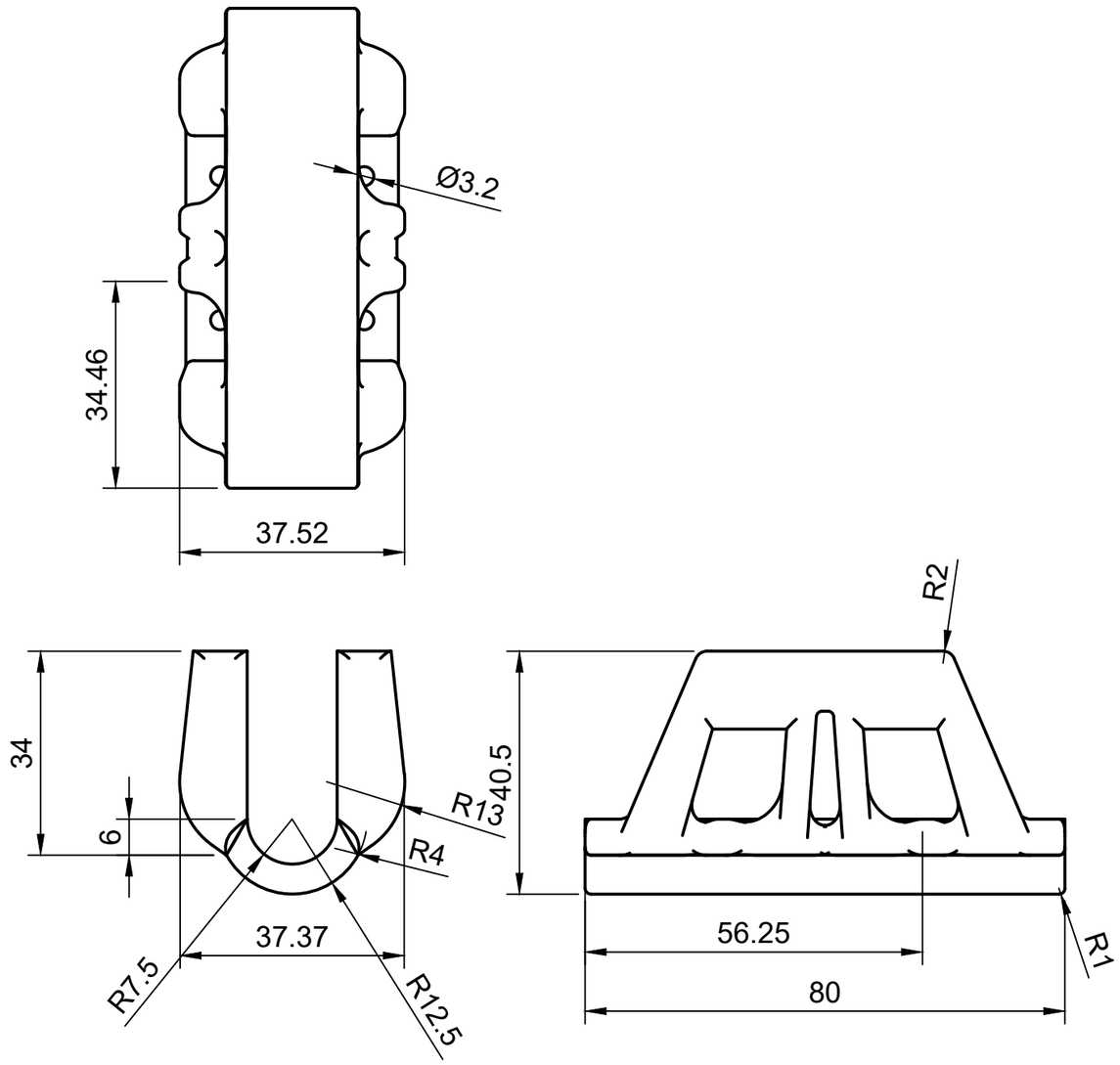

Created by	
Mark Joly	18.03.2026
Sheet	
2/4	
Title	
Back_motor_mount	

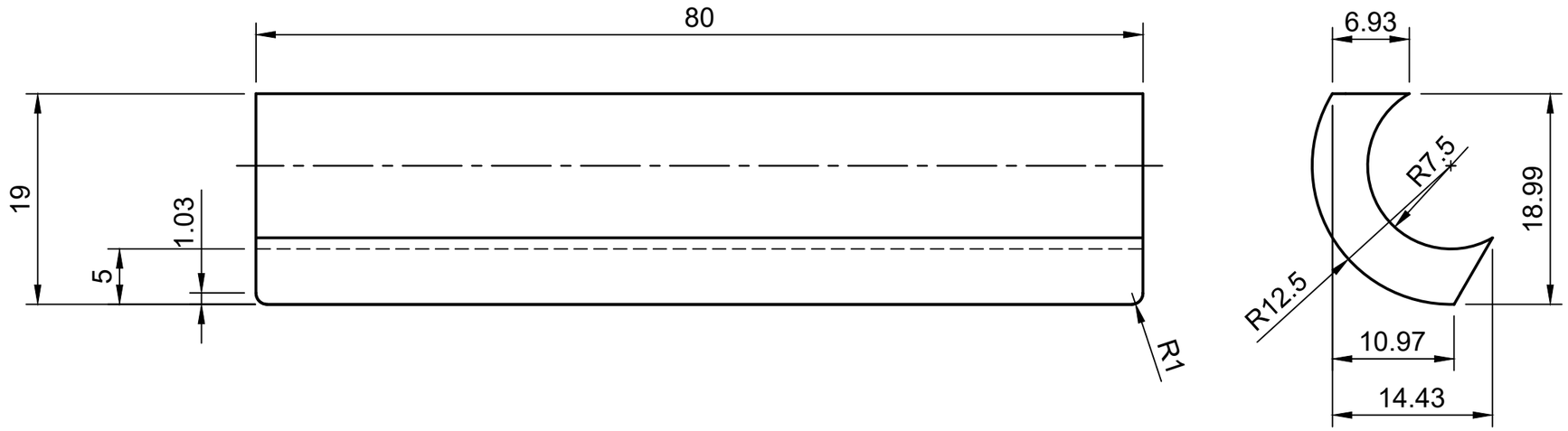

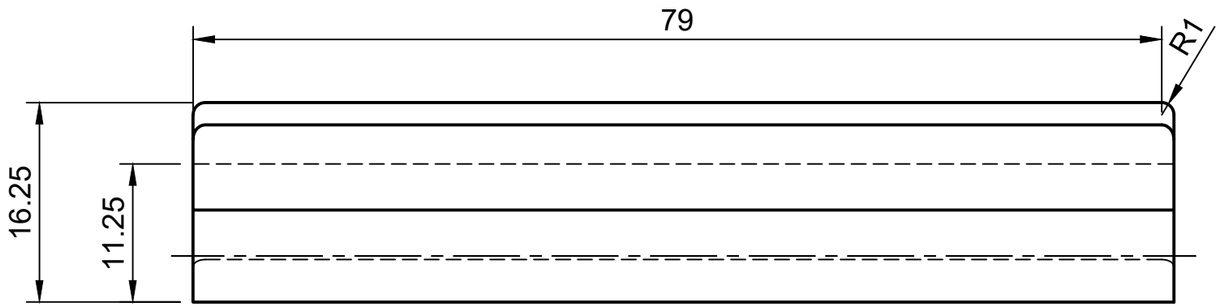

Created by	
Mark Joly	18.03.2026
Sheet	
3/4	
Title	
Back_motor_mount	

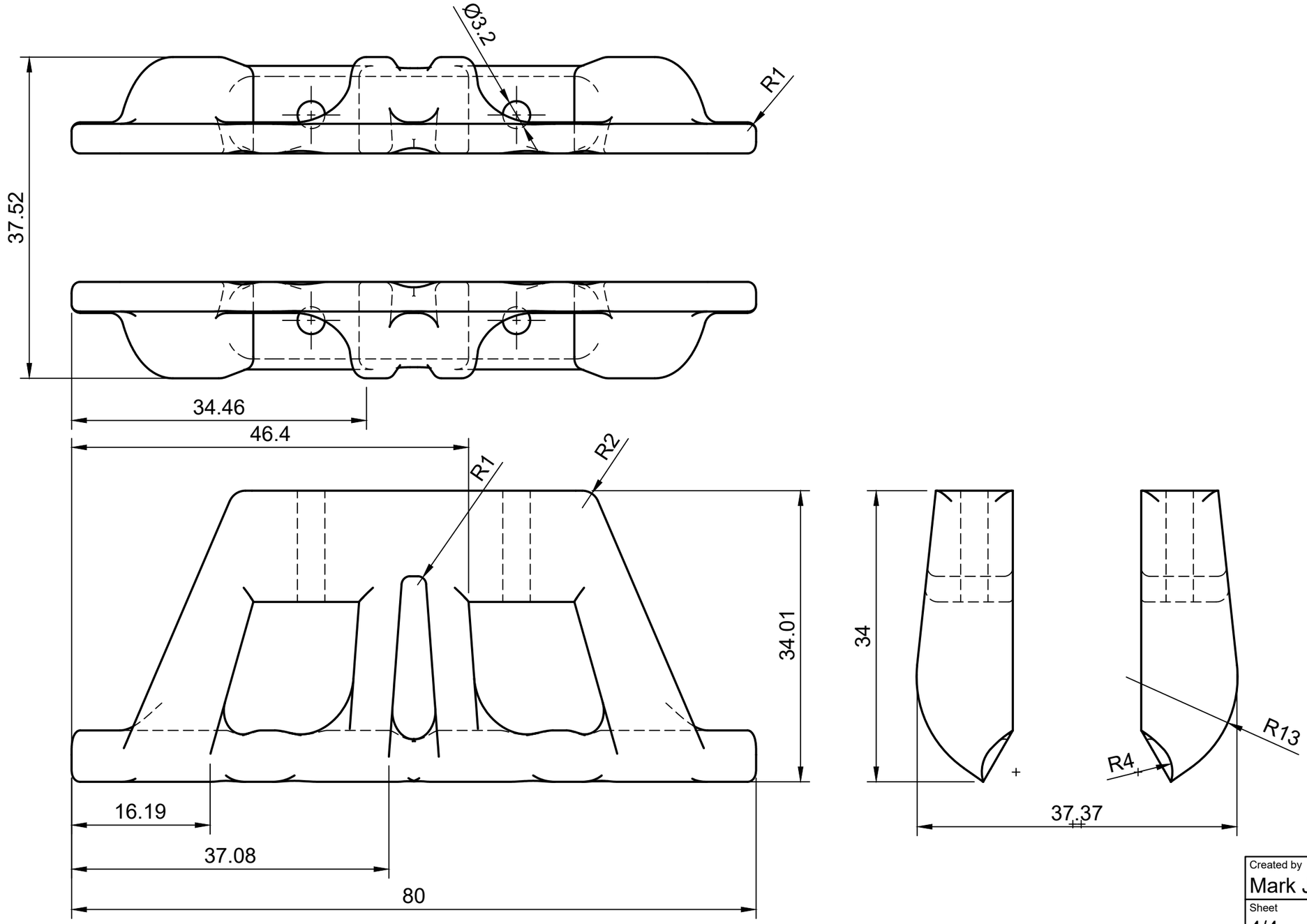

Created by	
Mark Joly	18.03.2026
Sheet	
4/4	
Title	
Back_motor_mount	